(Dual MCU+ Dual Sensor+DualServo PCB & CAD)

INDIASPACE LAB

ProjectReport

2nd Februaryto 3rd March 2026

Student Name: PRATYUSH CHANDRA JAISWAL
Institute Name: GLOCAL UNIVERSITY
Institute Roll no.: GU23R5393
Enrollmentno.: ISL-025616

Dual MCU+ Dual Sensor+DualServo PCB & CAD

Pratyush Chandra Jaiswal1,
1UG Student, Bachelor of Technology
in Computer Science and Engineering,
Glocal School of Science
&Technology, Glocal
UniversityMirzapurPole,Saharanpur
(247121),UttarPradesh India
Email:Pratyushf75@gmail.com

TASK 1: Avionics PCB Design

***Abstract*— This paper going to present the complete methodology for the designing of tbe CanSat Avionoics PCB design. It going to include the schematic, system architecture, port assignment, schematic planning, redundancy consideration and the PCB layout strategy. The PCB is design to meet the strict criteria given to meet the high grade PCB design which include dual Microcontrollers, dual sensor sets, dual servo motors. This all components are integrated such a way which have dual microcontrollers, redundant servo management, independent dual servo within a very compact PCB. The main goal is to ensure fault proof, mission reliable and which gives accurate data during the CanSat deployment.**

INTRODUCTION

This first task is to create the compact PCB which have the dual Microcontroller, dual servo motors, dual sensor sets. This all component are integrated such a way to ensure fault proof, mission reliable and it could generate accurate data during the CanSat deployment. CanSat mission require very reliable avionics which are capable to perform under unfavorable environment under limited size, weight, power. This PCB design have focused on the dual Microcontroller units (backup and Primary), dual sensor redundancy (Altimeter and IMU for each single one of the MCU(MicroController Unit) and dual servo for the parachute deployment. This design help to give backup support in the case of the failure of the primary unit.

1.1 CORE COMPONENTS

The avionics system consist of the two MCU which are independent to each other and which are operating freely and independently and they their own independent sensors components. Each MicroController unit have its own separate one BMP388 altimeter and one MPU6050 IMA which are isolated with the I2C buses. The two servo motors are managed and operated separately but have the same function of the parachute release to safeguard the deployment of the parachute. A very regulated power system supply the 3V and 5V derived from the battery using 5V buck regulator and AMS1117.

1.2 COMPONENTS USED

The components are as follows-

SI.No.	***COMPONENTS***	***QUANTITY***	***PURPOSE***
1.	Battery	1	Power Supply
2.	Power Switch	1	ON/OFF
3.	Primary MCU (ESP32)	1	Main flight control and data processing

4.	Secondary MCU (Backup)	1	Fail-safe backup controller
5.	BMP388 Altimeter Sensors	2	Altitude measurement redundancy
6.	MPU6050 IMU Sensors	2	Orientation and motion tracking
7.	Servo Motors	2	Parachute deployment redundancy
8.	5V Buck Regulator	1	Power regulation
9.	Voltage Divider Circuit	1	Battery voltage monitoring
10.	Programming Header (UART)	2	Debug and firmware upload
11.	Status LEDs	2	System health indication

2.NET PORT ARCHITECTURE

The net port architecture are as follows:-

SI.No.	***Component***	***Architecture***
1.	Power Nets	VBAT, +5V_REG, +3V3, GND
2.	Primary MCU Nets	I2C1_SDA, I2C1_SCL, PWM_SERVO1, UART_TX_MCU1, UART_RX_MCU1, LED_STATUS_MCU1, VBAT_MONITOR1
3.	Backup MCU Nets	I2C2_SDA, I2C2_SCL, PWM_SERVO2, UART_TX_MCU2, UART_RX_MCU2, LED_STATUS_MCU2, VBAT_MONITOR2
4.	Sensor Nets (Set 1)	BMP1_SDA, BMP1_SCL, MPU1_SDA, MPU1_SCL, MPU1_INT
5.	Sensor Nets (Set 2)	BMP2_SDA, BMP2_SCL, MPU2_SDA, MPU2_SCL, MPU2_INT
6.	Servo Nets	SERVO1_VCC, SERVO1_GND, PWM_SERVO1, SERVO2_VCC, SERVO2_GND, PWM_SERVO2

3.PCB DESIGN VIEW

The Schematic view of the PCB is given below.

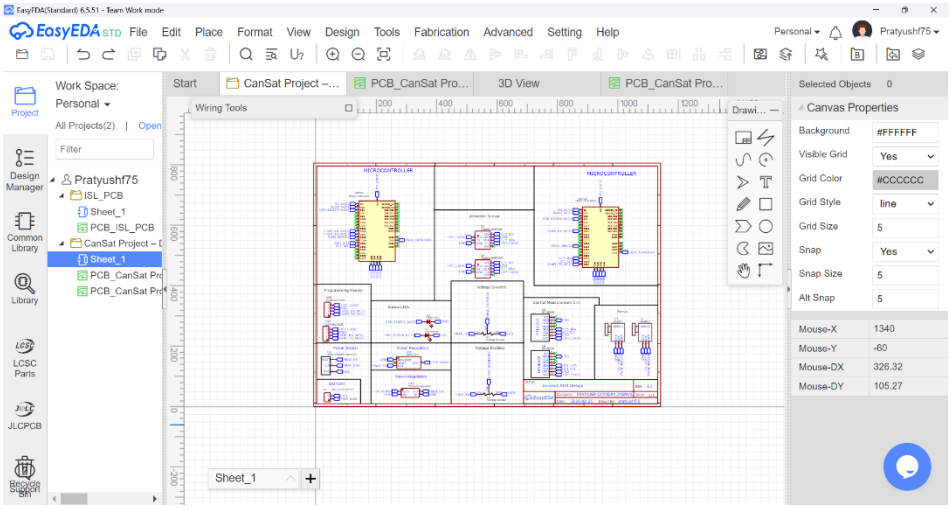

Fig. 1. PCB Schematic

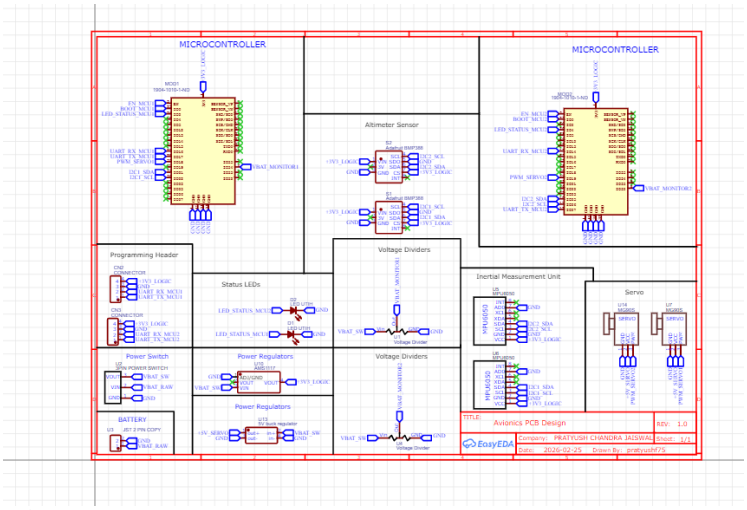

Fig. 2. PCB Schematic

The PCB layout is given below

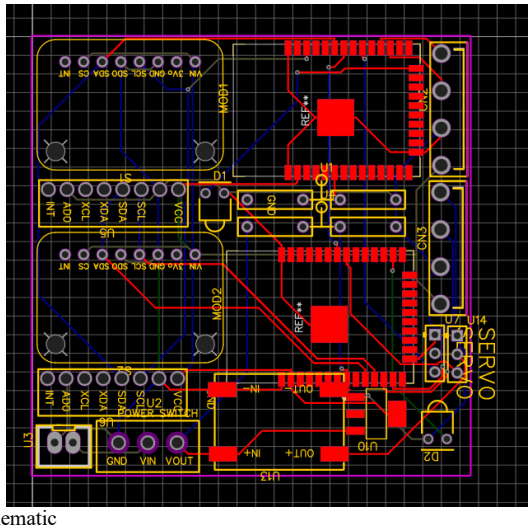

Fig. 2. PCB Schematic

The 3d PCB design is given below

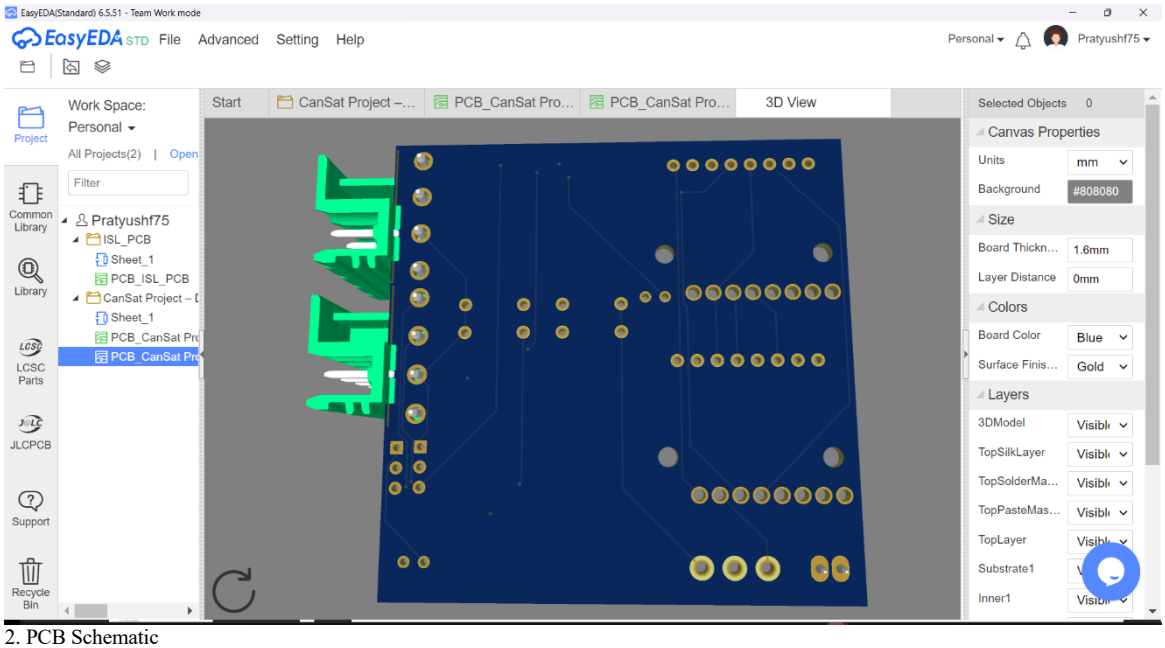

Fig. 2. PCB Schematic

4.CONCLUSION

This research grade avionics fulfills all the requirements which are mention in the task of compact integration, dual support system and full proof deployment mechanism for CanSat missions. It has completed all the necessary requirements for the design criteria. It is scalable, manufacturable and align with embedded system best practices.

5.FILE LINK

TASK 2: CanSat CAD DESIGN

***Abstract*— This paper going to present the design and making off the CanSat, which a small satellite, which exactly fit in the standard soda can. The main goal is to make a functional CansSat which have the compartment for the Avionics, parachute and other electronics which can fit perfectly and can be release in the atmosphere and it can collect data and with a safe decent.**

INTRODUCTION

This second task include the designing of the CanSat which can hold avionics, parachute and other components. It should have different compartment to hold all the components and easily recoverable. Different compartment with separate servo which can open the latch.

1.1 CANSAT IMAGES

The given below is the CanSat Image

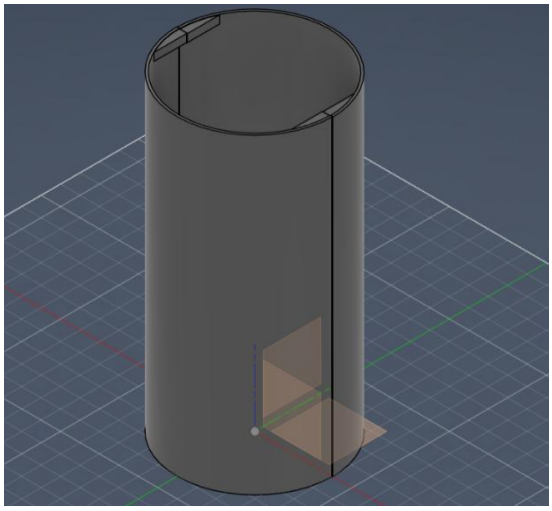

Fig. 2. PCB Schematic

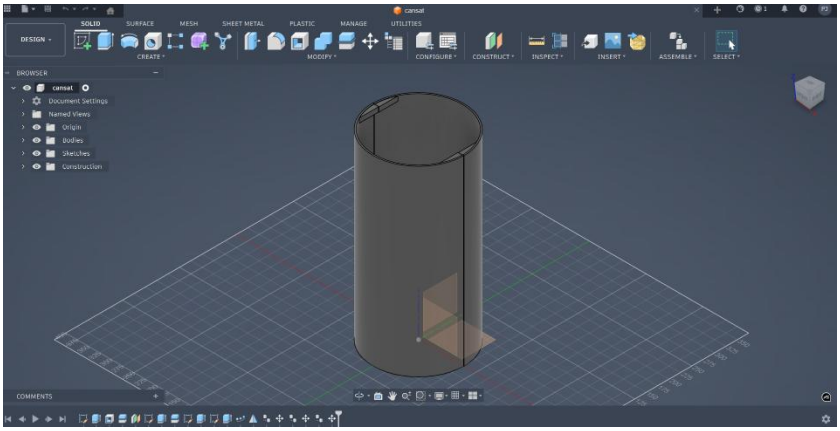

Fig. 2. PCB Schematic

2. CONCLUSION

The casat have all the required compartment which are to be used for the placement of the components.

3.FILE LINKS